Round 4 - Sunday, January 16, 2022

SHOTLINK

Sony Open in Hawaii

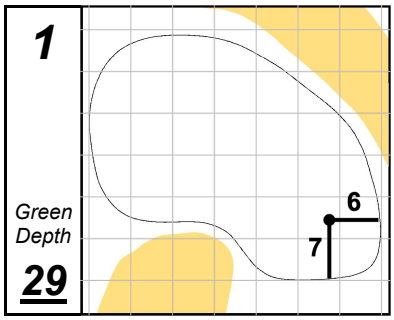

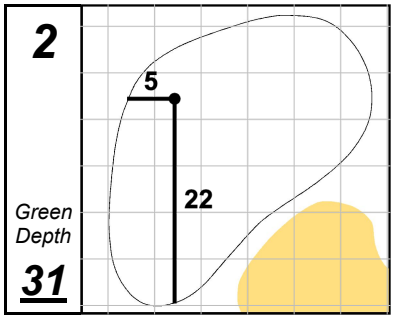

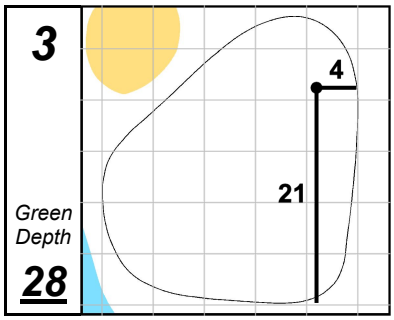

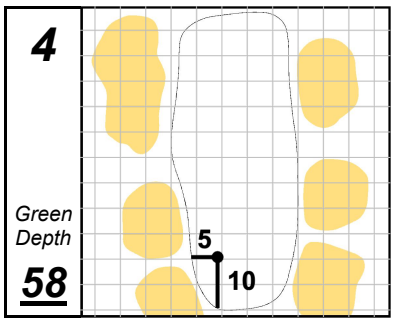

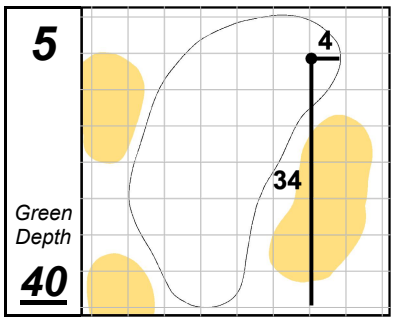

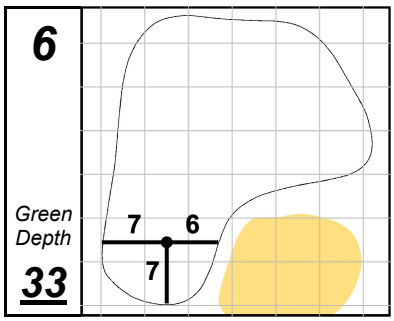

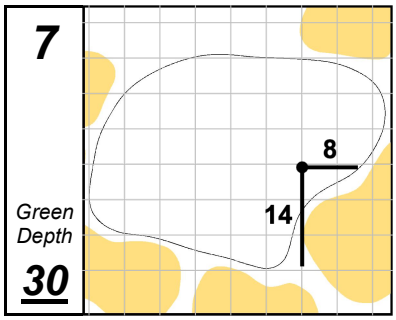

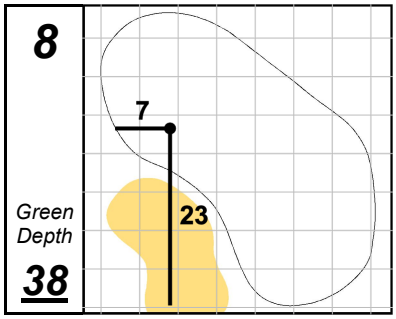

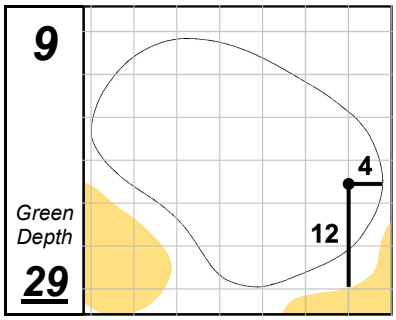

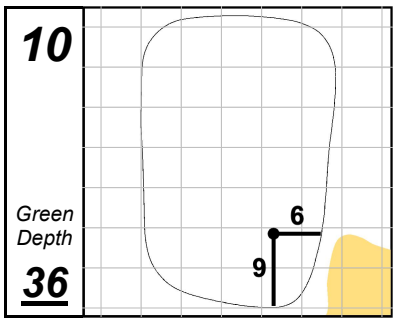

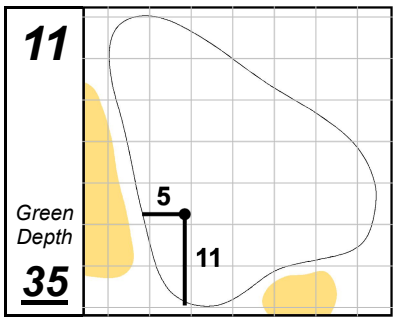

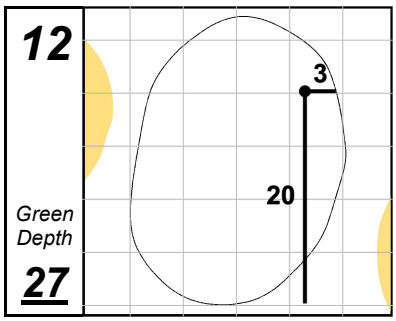

Waialae Country Club

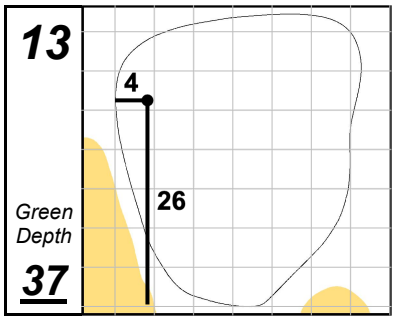

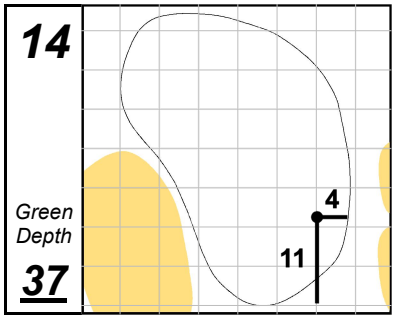

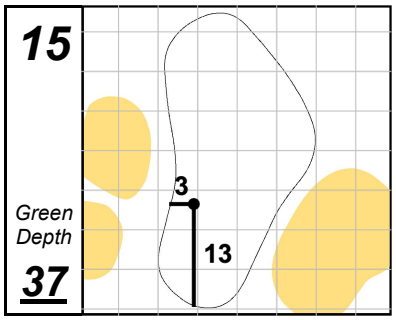

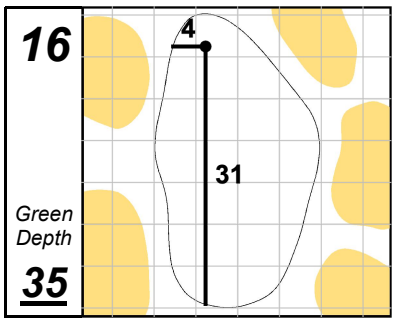

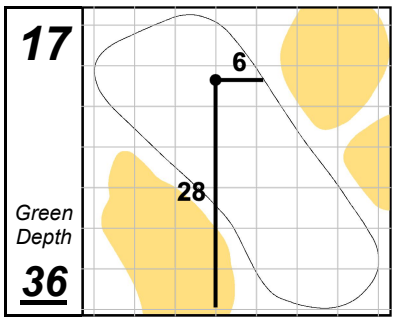

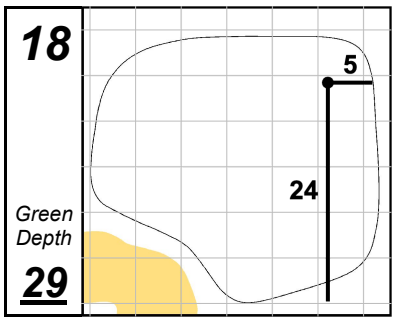

Each side of a complete square on the green represents 5 YARDS.

Saturday, January 15, 2022 10:22:26 AM